SQUIRREL CAGE MOTORS TYPE HS

TOTALLY ENCLOSED WATER TO AIR COOLED
HORIZONTAL ROLLING OR SLEEVE BEARINGS

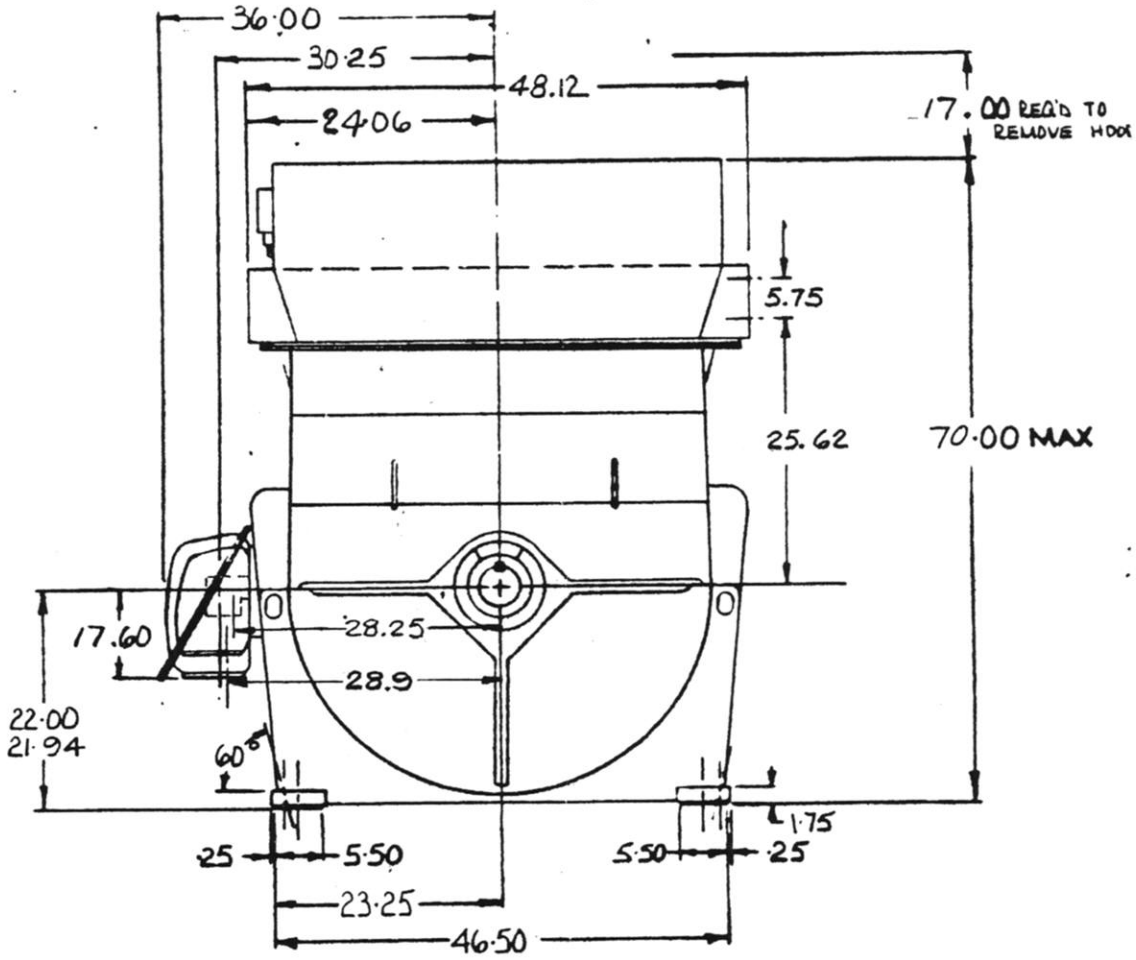

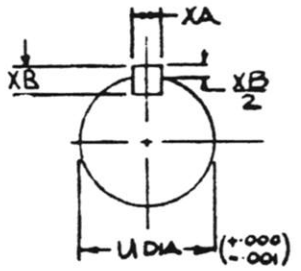

SECTION A-A